STEGMEIER® LLC

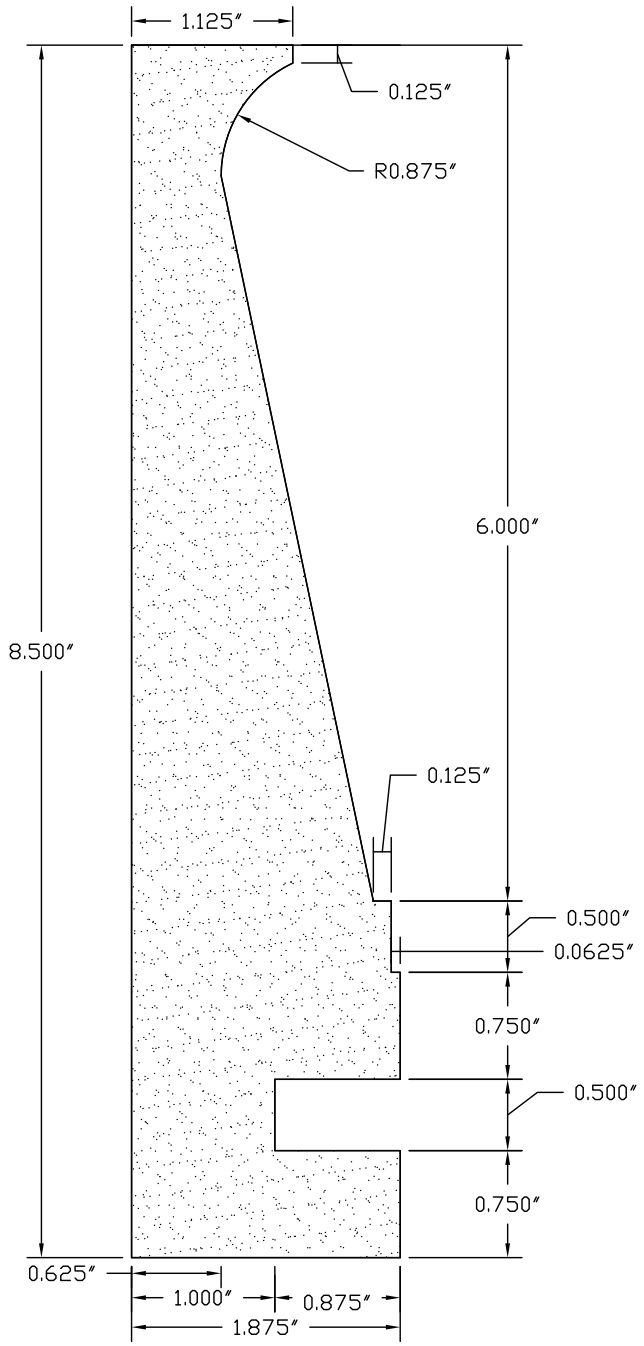

6" Capstone Form

CORPORATE OFFICE 1111 West Harris Road • Arlington, TX 76001 • (800) 382-5430
www.stegmeier.com

Note all units in inches

DOWNLOAD THE STEGMEIER LLC APP Download on the App Store GET IT ON Google Play